Wireless Product Solutions

www.microchip.com/wireless

Wireless Connectivity for Your Application

Wireless technologies affect our everyday life. Phones—once corded—are not only cordless, but are no longer tethered to our homes. Computers—once big, bulky and connected with numerous cables—are now no bigger than the palm of your hand and are only connected to a cable for the occasional battery charge.

With multiple wireless technologies available and the latest industry standards enabling interoperability between devices, there's a growing demand to add wireless connectivity to the latest products. As a leader in low-power, drop-in wireless solutions, Microchip has transformed the formerly daunting and expensive task of adding wireless connectivity into an easy and cost-effective process.

How does Microchip make Wireless Connectivity Easy?

- Fully-certified modules for drop-in wireless connectivity get your products to market fast
- Development tools enable prototype creation in days instead of weeks
- Library of resources including documentation and free software
- Global support team of wireless experts

Depending on the application, Microchip can address your need with its extensive portfolio of transmitters and transceivers available across a number of different wireless technologies. Microchip's portfolio includes agency-certified modules for standards such as **Wi-Fi®, Bluetooth®, IEEE 802.15.4/ZigBee®**, and proprietary systems that use simple **802.15.4, 2.4 GHz** or **Sub-GHz** ISM bands. Microchip's solutions are designed to address multiple market segments including:

- Internet of Things
- Home/building automation
- Smart energy
- Smartphone to devices
- Remote equipment monitoring
- Asset tracking and telemetry
- Security
- Wireless audio
- Industrial sensors and controls
- Medical devices

Microchip's Broad Wireless Portfolio

Wi-Fi

Easily add Wi-Fi connectivity to an application with drop-in Wi-Fi modules.

Bluetooth

Connect mobile devices to wireless applications with easy-to-use Bluetooth and Bluetooth Smart modules.

Personal Area Networks (PAN)

Standard and proprietary module solutions designed for low-power and multi-node systems.

Security

Integrated microcontroller with RF is an ideal platform for remote keyless entry and secure wireless applications using KeeLoq® Technology and advanced security technologies.

Embedded Wi-Fi Products

Wireless designs are being implemented at exponential rates in home and building automation applications, offering a broad range of new and innovative products. Product designers can find plenty of examples in their own homes where wireless connectivity could make or already has made a significant difference in their personal lives.

Wi-Fi Connectivity Offers:

- Ease of control with a smartphone/tablet
- Connection to the Cloud
- Support for the Internet of Things
- Visibility and control over your devices wherever you are
- Standards-based technology
- Financial savings through energy management
- Personal security for you and your home

The beauty of Wi-Fi is in its ubiquity; it is not limited to just one type of application or environment. In fact, every room in every house can benefit from Wi-Fi connectivity in some way. Potential Wi-Fi applications are everywhere and Microchip has the right Wi-Fi solution for you no matter what type of architecture you are using.

Wi-Fi Products

If you're ready to add Wi-Fi connectivity to your product today, Microchip's large portfolio of Wi-Fi-certified modules and RF chipset solutions are designed with simplicity and low power, enabling extremely fast design cycles and, in turn, reducing time to market.

Our modules come with **full modular radio certifications** and include **full TCP/IP stacks** and **networking services** all in a compact surface mount component. The modules also offer a variety of general purpose I/O's, analog inputs and serial interfaces that include UART and SPI.

Get The Best Fit: Application-Specific Architecture

Microchip's Wi-Fi portfolio supports two different architectures. If you are looking for a Wi-Fi solution that can use any microcontroller of any size and by any vendor, you will probably find the **RN solution** the best option. It contains the stack and services built onto the module itself with access to the MCU via a simple ASCII interface.

If you are using a PIC® microcontroller and you want to modify or customize your networking services, the **MRF solution** is a good choice. The MRF series of products are designed to run the stack and services on the PIC microcontroller.

Embedded Wi-Fi Products

RN Wi-Fi Series

Integrated Stack on Module

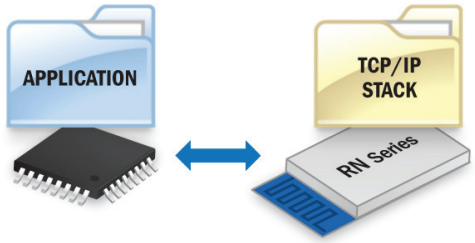

- TCP/IP stack on module (no external drivers required)
- Simple ASCII interface
- Works with any microcontroller

RN Modules Block Diagram

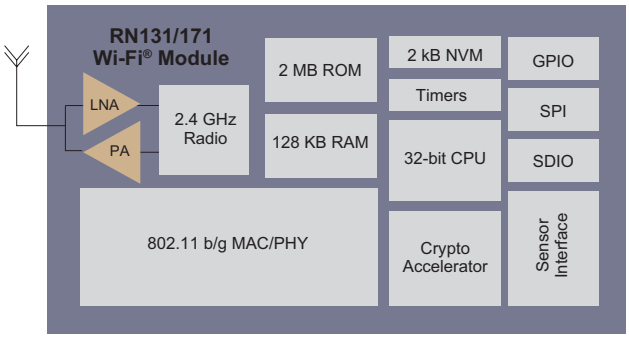

MRF Wi-Fi Series

Stack Runs on PIC Microcontroller

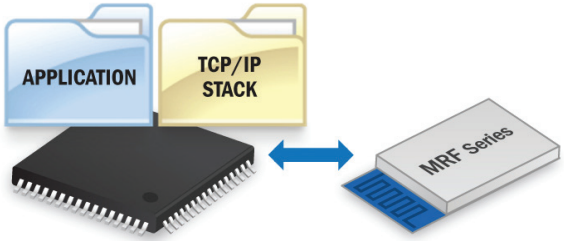

- TCP/IP stack on PIC MCU
- Elegant solution for combined Ethernet and Wi-Fi applications
- Extendable TCP/IP stack for additional services

MRF Modules Block Diagram

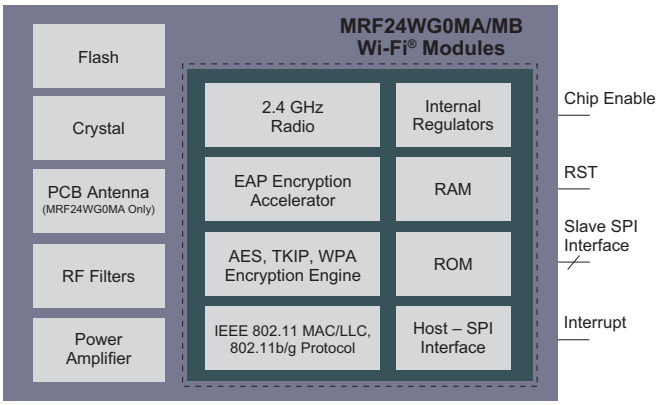

Modular Certification

Modular certification enables customers with little or no RF experience to implement Wi-Fi without the need to concern themselves with costly government agency certifications which can often lead to additional time and expense.

Microchip has fully-certified its portfolio of modules with a number of agencies including:

- FCC (United States)
- IC (Canada)
- EN (European Union)
- KC (Korea)
- NCC (Taiwan)
- Telec (Japan)
- and others

In addition to governmental agencies, Microchip works with the Wi-Fi Alliance to insure interoperability with other Wi-Fi certified devices.

Network services offered in addition to the base UDP and TCP protocols include:

- Wi-Fi Protected Setup (WPS)
- Built-in web servers for simple browser-based configuration
- File Transfer Protocol (FTP)
- Hypertext Transfer Protocol (HTTP)
- Wi-Fi Direct
- DHCP Client and server modes
- Domain Name Service (DNS)
- Secure Socket Level (SSL)
- mDNS (Bonjour/Zero Config)
- Simple Mail Transfer Protocol (SMTP)
- and many others

Embedded Wi-Fi Products

Wi-Fi Applications

Microchip's 802.11 Wi-Fi solutions offer over-the-air (OTA) data rates of up to 54 Mbps and data throughputs of up to 5 Mbps making them perfect for command/control or sensor-type embedded applications. Low 30–40 mA receive currents and 4 µA sleep modes allow for battery-powered Wi-Fi applications such as refrigerator temperature alert sensors, smoke alarms, and leak detectors. In all cases, the native IP connectivity allows you to receive notifications and issue commands across the Internet, wherever you may be.

Other Wi-Fi applications for home/building include:

- Smart appliances such as refrigerators, dishwashers and washing machines to monitor energy or water consumption
- Automated lighting
- Automated drapes/curtains/shades
- Smart thermostats for monitoring temperature/humidity
- Security such as automatic lights, wireless cameras, automatic door locks and motion detectors
- Pool sensors for monitoring/managing water level, quality
- Gas/water/smart meters for monitoring/managing energy consumption in real time

Network Security

Microchip knows how important security is to your Wi-Fi application. We support all the latest secure authentication schemes such as personal WPA2 or Enterprise level EAP/PEAP allowing for both commercial and industrial applications. Our solutions also support older legacy security such as WEP64/128 or the original WPA.

Network support

Microchip's Wi-Fi modules support SoftAP mode. This allows the module to look like an access point and act as the central network coordinator, controlling basic management such as DHCP, routing and gateway redirection directly on the module. We also offer the traditional infrastructure modes that operate through simple routers and ad hoc mode for point-to-point networks.

Embedded Wi-Fi Products

Product	Sensitivity (dBm)	Power Output (dBm)	Tx, Max. Power Consumption (mA)	Rx Power Consumption (mA)	Sleep*	Interface	Packages	Antenna	Range** (meters)	Operating Temp.
MRF Series										
MRF24WB0MA MRF24WB0MB	–91	+10	154	85	0.1 µA	4-wire SPI	36-pin	PCB or U.FL connector	Up to 300	–40°C to +85°C
MRF24WG0MA MRF24WG0MB	–95	+18	240	156	0.1 mA	4-wire SPI	36-pin	PCB or U.FL connector	Up to 300	–40°C to +85°C
RN Series										
RN131G RN131C	–85	+18	210	40	4 µA	UART, SPI Slave	44-pin	Chip, U.FL connector	Up to 300	–40°C to +85°C (RN131G) 0°C to +70°C (RN131C)
RN171	–83	0 to +12	130	30	4 µA	UART, SPI Slave	49-pin	RF pad	Up to 180	–40°C to +85°C
RN171XV	–83	0 to +12	130	30	4 µA	UART, SPI Slave	2 × 10-pin socket module	Wire, SMA connector, U.FL	Up to 180	–40°C to +85°C

*Indicates "off" current for sleep column **Open air line-of-site

Embedded Wi-Fi Development Tools

Microchip offers several MRF and RN development tools for any development environment. The MRF and RN PICtail™/PICtail Plus Daughter boards seamlessly add Wi-Fi connectivity to Explorer-based systems. For non-Explorer-based systems, the MRF/RN battery-powered, portable pocket demo quickly and easily adds Wi-Fi connectivity to embedded applications.

	Explorer-Based Development Board				Pocket Demos			
Series	MRF		RN		MRF		RN	
Platform	**8-bit:** PICDEM.net2 **16-bit:** Explorer 16 **32-bit:** PIC32 Starter Kit + I/O Board, Explorer 16 + PIC32 PIM, PIC32 Starter Kit + Multimedia Board				Standalone			
Module	MRF24WB0MA/MB	MRF24WG0MA/MB	RN131	RN171	MRF24WB0MA/MB	MRF24WG0MA/MB	RN131	RN171
Image								
Part #	AC164136-4*	AC164149*	RN-131-PICTAIL	RN-171-PICTAIL	DV102411*	DV102412*	RN-131-EK	RN-171-EK

*The TCP/IP stack and demo applications can be downloaded from www.microchip.com/mla.

www.microchip.com/wifi

Embedded Bluetooth Products

The Bluetooth market is taking off. No longer relegated solely to the Bluetooth headset, Bluetooth is finding a home in multiple new markets thanks to the smartphone and other mobile devices that make it incredibly easy to connect point to point over Bluetooth. Bluetooth Smart—or Bluetooth Low Energy—enables the battery-life on these mobile devices to last longer than ever.

Bluetooth Connectivity Offers:

- Ease of control with a smartphone/tablet
- Short-range, personal connections
- Standards-based technology
- Easy connect and disconnect
- Low power for long battery life

Microchip recognizes the value of Bluetooth connectivity and is leading the way with low-power Bluetooth solutions designed for drop-in connectivity.

Bluetooth Products

If Bluetooth connectivity is the best fit for your application, then Microchip has you covered with a large portfolio of low-power embedded Bluetooth modules that are fully certified, easy to use, and ideally suited to any data or audio application. The modules are complete with on-board stack, common application profiles and an ASCII command interface if an external microcontroller is required for a given application.

Embedded Bluetooth Products

Bluetooth Classic

Microchip offers Class 1 and Class 2 Bluetooth 2.1+EDR data modules. For data applications, the RN41 and RN42 are low-power Bluetooth EDR 2.1 modules that share the same footprint, on-board stack and ASCII interface. The modules work seamlessly with Android™ and Apple® iOS devices and can provide up to 100m line-of-sight operation. The RN41 and RN42 are ideal for multiple applications including cable replacement, scanners, sensors, medical devices and asset tracking.

For data applications, the RN series of Bluetooth modules provide a number of on-module profiles including:

Data Profiles

- SPP Serial Port Profile
- HID Human Interface Device
- iAP iPod® Accessory Profile
- DUN Dial-Up Networking

For applications needing a less-common profile, the RN series of Bluetooth modules also offer the Host Controller Interface (HCI), enabling external microcontrollers to offer additional support.

Bluetooth Smart

Bluetooth Smart (also referred to as Bluetooth Low Energy) enables extremely power efficient wireless command and control of devices using smartphones and tablets. Applications such as fitness devices and sensors, home automation, appliances and even toys benefit from the efficiency of Bluetooth Smart. Microchip makes it easy to add Bluetooth Smart to your design with the RN4020 Bluetooth Low Energy Module.

- Simple ASCII command interface over UART
- Data streaming with Microchip's Low-Energy Data Profile (MLDP)
- Scripting for standalone module operation with analog and digital data collection
- Compact 19.5 × 11.5 × 2.5 mm size, for ease of integration in size-constrained applications
- Bluetooth SIG and Worldwide Regulatory certification
- 7 dBm transmit power for 100m+ range*

*dependent on environment, results will vary

Block Diagrams

RN41/42 Bluetooth Module

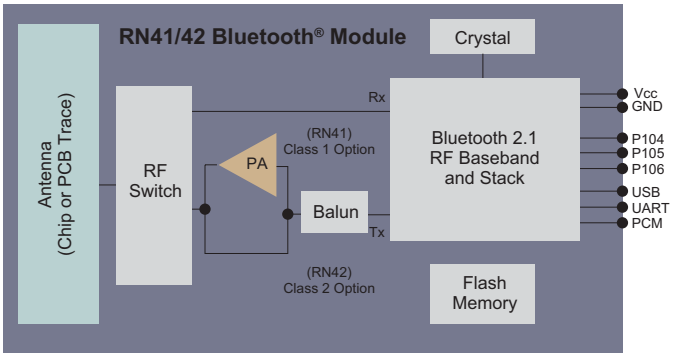

RN4020 Bluetooth Module

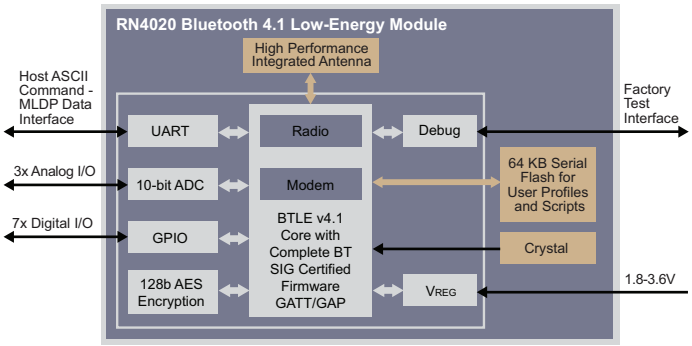

Bluetooth Audio

Bluetooth audio modules can be used to send or receive streaming audio in devices such as speakers, hands-free kits and even toys. Microchip's series of Bluetooth 3.0 audio modules are fully integrated Class 2 radios with an embedded internal DSP processor which can be controlled by simple ASCII commands. Internal input and output audio amplifiers allow for stand-alone operation in many applications.

The embedded stack and the audio and data profiles allow for operation with or without an external microcontroller. Additionally, our audio solutions support SBC, aptX® and AAC codecs. This portfolio of modules offers both analog and digital audio interfaces to provide high-quality and robust audio and data links.

Audio Profiles

- A2DP Advanced Audio Distribution Profile
- AVRCP Audio/Video Remote Control Profile
- HFP/HSP Hands-Free Profile/Headset Profile

Embedded Bluetooth Products

Bluetooth Applications

Microchip's Bluetooth solutions are specifically designed for smartphone applications. The data and audio modules work seamlessly with Android and iPhone® smartphones and tablets.

Bluetooth Classic Applications

The RN42 Bluetooth Classic module has a 3 Mbps data rate for distances up to 20 meters and the RN41 has a range of up to 100 meters. Offering a small form factor and complete on-board package, these modules are ideal for applications ranging from basic cable replacement to barcode scanners, medical devices and computer accessories.

The RN41 and RN42 are also available as 'APL' modules. Pin-compatible with the standard part versions, these 'APL' modules natively support iAP (iPod Accessory Protocol) data connections and directly manage authentication to all iPhones, iPads® and iPods, greatly reducing engineering effort and cost and simplifying accessory product design.

Conventional Approach

Customer Implements iAP on Microcontroller

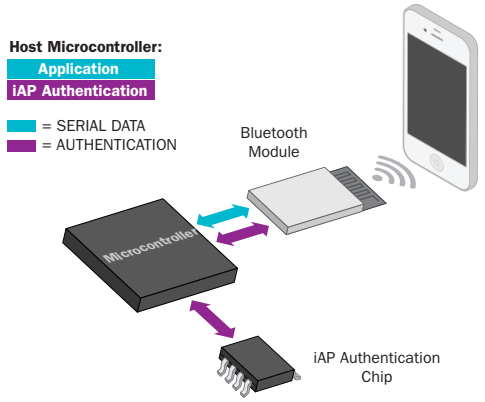

- High-end microcontroller
- Management of iAP in embedded software
- Longer development cycles and learning curve for iAP

Microchip's Bluetooth Solution

Bluetooth Module Implements iAP

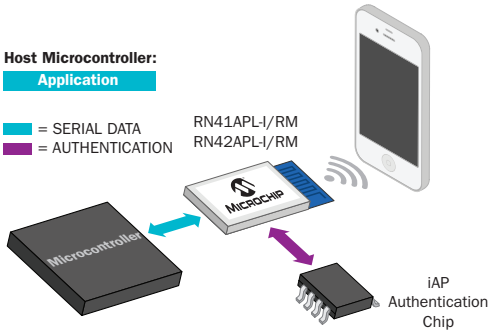

- Low-cost host microcontroller
- Simple host interface
- iAP transparent to user
- Lets you focus on your design, not iAP protocols
- Interfaces to the system independent of smartphone

IMPORTANT: All products designed to connect to iPhones, iPods and iPads, including those that incorporate the Microchip Bluetooth APL module, must be approved with Apple's Made for iPod (MFi) program. Developers of such products should visit Apple's developer portal at: http://developer.apple.com/ipod to enroll. MFi membership is required to purchase the evaluation kit or modules.

Bluetooth Smart Applications

The RN4020, a Bluetooth Low Energy module, is designed for battery-powered Bluetooth applications that require very low power and extremely long battery life, such as sensors, clinical applications and fitness devices. Like the RN41 and RN42 Bluetooth Classic modules, the RN4020 is fully certified, has the complete Bluetooth stack on-board the module and is controlled via simple ASCII commands. It is a complete, drop-in solution for easily adding Bluetooth low energy to an application and speeding your time to market.

Bluetooth Audio Applications

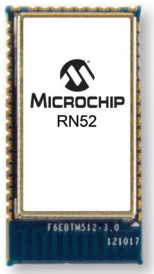

The RN52 audio module is a fully integrated solution for delivering high-quality stereo audio in a small form factor. This low-power audio module easily pairs with any smartphone, streams music and takes hands-free calls. It has many applications including wireless stereo speakers and headsets, wireless audio docking stations for smartphones, smartphone app streaming and more.

Embedded Bluetooth Products

Bluetooth Products

Part #	Typical Range (meters)	Interface	Output Power (dBm)	Package	Antenna	Size (mm)	Bluetooth®
RN4020-V/RM	100	UART, PIO, AIO, SPI	+7	Surface mount	PCB trace	11.5 × 19.5 × 2.5	4.1
RN41-I/RM	100	UART, USB	+15	Surface mount	Chip	13.4 × 25.8 × 2.0	2.1
RN42-I/RM	30	UART, USB	+4	Surface mount	PCB trace	13.4 × 25.8 × 2.0	2.1
RN52-I/RM	30	UART, USB, I²S™, S/PDIF, GPIO	+4	Surface mount	PCB trace	13.5 × 26.0 × 2.7	3.0
RN41XVC-I/RM **RN41XVU-I/RM**	100	UART, USB	+15	Socket (male header)	Chip, U.FL	24.4 × 29.9 × 8.0	2.1
RN42XVP-I/RM **RN42XVU-I/RM**	30	UART, USB	+4	Socket (male header)	PCB trace, U.FL	24.4 × 29.9 × 8.0	2.1

Bluetooth Development Tools

Quickly add Bluetooth connectivity to embedded applications with Microchip's full line of easy-to-use development kits. USB-powered, plug-and-play evaluation kits with status LEDs, switches and signal headers enable rapid prototyping and integration into existing systems.

Part #		Module	Description	Contents
RN-4020-PICTAIL	Data v4.1	RN4020	USB plug-and-play evaluation kit for the RN4020 Bluetooth Low Energy module with PICtail™/PICtail Plus interfaces and PICkit™ Serial Programmer/Debugger interface	■ RN4020 PICtail/PICtail Plus board ■ USB cable
RN-4x-EK	Data v2.1	RN41	USB plug-and-play evaluation kit for the RN4x Bluetooth Classic module	■ Evaluation board ■ USB cable
	Data v2.1	RN42		
RN-52-EK 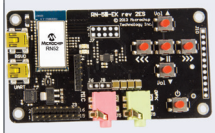	Audio v3.0	RN52	Pair with any smartphone, stream music and take hands-free calls with this easy-to-use evaluation kit	■ Evaluation board ■ USB cable ■ Two mini-speakers ■ Microphone
RN-4x-APL-EVAL	Data v2.1	RN41APL	Evaluation kit with iAP authentication co-processor on the board simplifies development for iPhone®, iPad®, and iPod® devices	■ Evaluation board ■ Four RN4xAPL modules ■ Design docs ■ Source code
	Data v2.1	RN42APL		
RN-XV-EK1 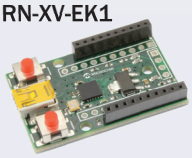	Data v2.1	RN41XV	USB plug-and-play evaluation board with connectors to drop in the RNXV module series	■ Evaluation board ■ USB cable
		RN42XV		
DV320032	Audio v4.1	–	Provides a comprehensive solution to develop Bluetooth® A2DP audio streaming solutions and applications	■ Evaluation board ■ USB cable

Personal Area Networks

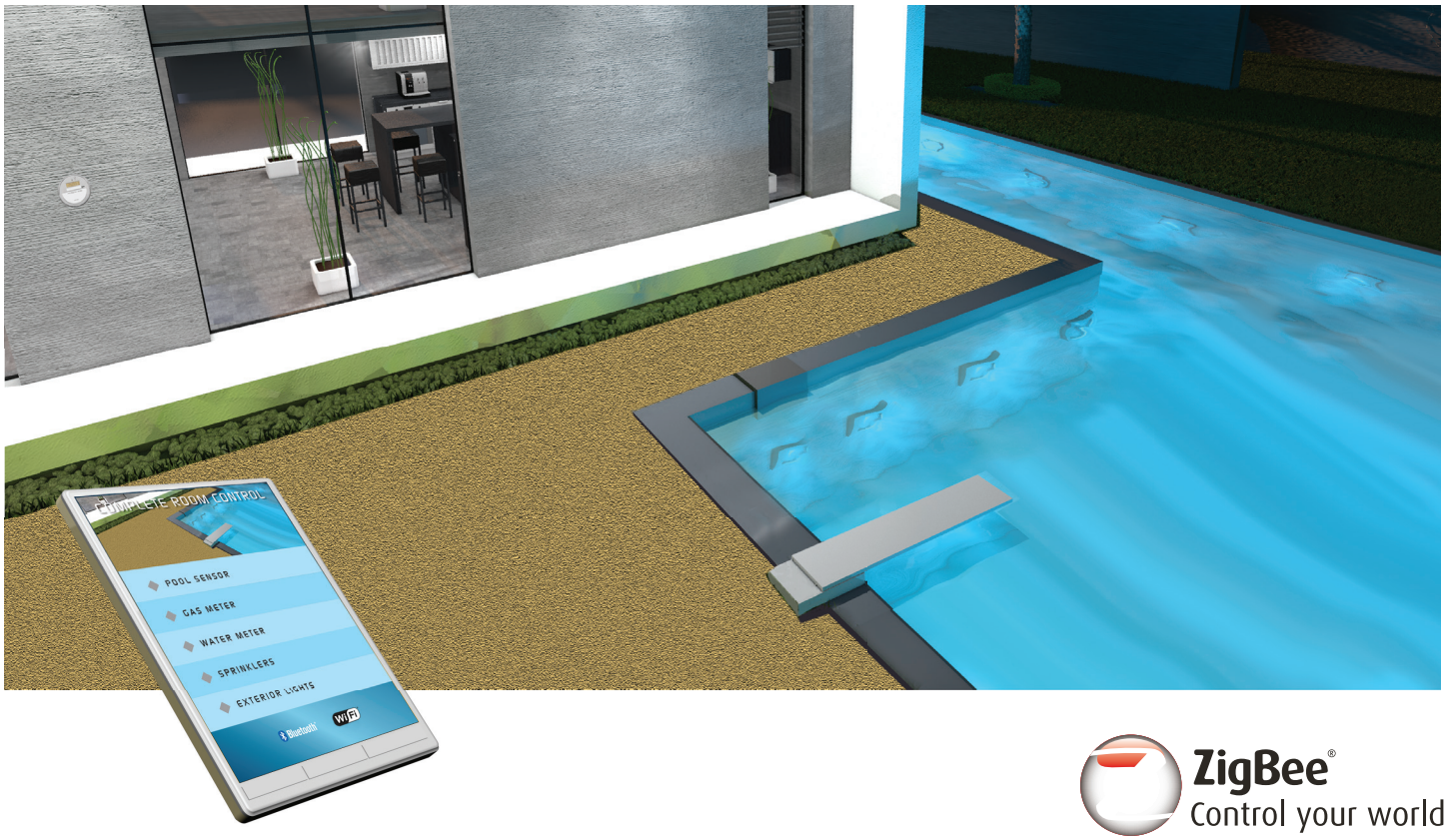

ZigBee®
Control your world

ZigBee

ZigBee was developed to allow embedded products to interconnect via a low-power radio for command and control operations. While many home and building automation protocols exist, the ZigBee protocol is the only multi-vendor, standards-driven protocol available today.

ZigBee Connectivity Offers:

- Low-power radio
- Standard-based technology
- Small footprint
- Scalable from hundreds to thousands of nodes

ZigBee continues to permeate the wireless space due to its low-power and standards-based technology. Microchip offers fully certified ZigBee modules, ZigBee Stacks and royalty-free source code for easy implementation and fast time to market.

ZigBee Block Diagram

MRF24J40MA IEEE Std. 802.15.4™ Module

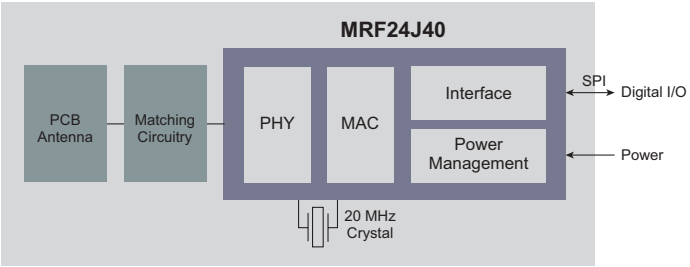

ZigBee Products

If ZigBee is the best fit for your application, Microchip has all the modules, chipsets, software and development tools that you need for quick development.

Microchip's most versatile transceiver, the MRF24XA, is a 2.4 GHz RF transceiver with feature extensions. The MRF24XA integrates the PHY and MAC functionality of the stack in a single-chip solution. This feature-rich transceiver supports low-cost, low-power, high-data-rate (125 kbps to 2 Mbps) products and includes support for both ZigBee RF4CE and the MiWi Protocol.

If you need a modular ZigBee solution, Microchip offers several footprint-compatible ZigBee modules that interface to many popular Microchip PIC microcontrollers. The MRF24J40MA/MC/MD are 2.4 GHz IEEE 802.15.4™ compliant, surface mount modules with integrated crystal, internal voltage regulator and matching circuitry. These small form factor modules operate in the non-licensed 2.4 GHz frequency band and are fully certified, eliminating the need for expensive RF and antenna design to speed time to market. The modules are compatible with Microchip's ZigBee, MiWi and MiWi P2P software stacks. Each software stack is available as a free download, including source code.

Personal Area Networks

The Right Stack: ZigBee Stacks for Your Application

As a member of the ZigBee Alliance, Microchip offers a certified ZigBee Compliant Platform (ZCP) for the ZigBee PRO, ZigBee RF4CE and ZigBee residential stacks. The ZCP is an ideal starting place if you are looking to develop a ZigBee-compliant product and ensure interoperability with the ZigBee industry standard.

The ZigBee stack is provided royalty free and has an efficient footprint for each of the various options:

- **ZigBee RF4CE:** Developed for consumer remote controls and audio/visual equipment, the ZigBee RF4CE has the smallest ZigBee footprint. Microchip's RF4CE solution is one of the industry's smallest and lowest-power versions.
- **ZigBee PRO:** Designed for much larger networks that may be comprised of thousands of nodes. The stack is also designed to offer the lowest power characteristics allowing for products powered by energy harvesting techniques.

The ZCP suite includes the **ZigBee Smart Energy Profile (SEP)** and is provided as source code. This allows you to customize your design for use with the broad portfolio of PIC microcontrollers, including the PIC24, PIC32 and dsPIC33 DSC families.

ZigBee Applications

There are many home and building applications perfectly suited for ZigBee connectivity. With its low cost and low power, ZigBee allows for larger deployment in control and monitoring applications such as smart meters and lighting.

For ZigBee RF4CE applications, Microchip offers one of the smallest-footprint, lowest-sleep current, RF4CE-compliant platforms for consumer electronics and equipment manufacturers. Microchip's ZigBee module with the RF4CE stack is ideal for remote controls and audio/visual equipment.

Microchip's full-featured ZigBee modules, along with the ZigBee PRO stack and SEP suite, are designed for Smart Energy applications. They are fully certified and compatible with 16- and 32-bit PIC MCU families, enabling you to easily develop ZigBee-based applications and reduce your time to market. They also support hundreds of nodes found in both mesh and star network topologies. Typical mesh network applications include solar panels, home/commercial sensors and lighting.

IEEE 802.15.4 2.4 GHz Products

Transceivers

Transceiver	Data Rate	Frequency Range (MHz)	Sensitivity (dBm)	Tx Power	Rx Mode	Output Power (dBm)
MRF24J40	250 kbps	2.405–2.48	–94	23 mA	19 mA	+0
MRF24XA	125 kbps–2 Mbps	2.405–2.48	–103	23 mA	13.5 mA	+0

Modules

Module	Data Rate	Frequency Range (MHz)	Sensitivity (dBm)	Tx Power	Rx Mode	Output Power (dBm)
MRF24J40MA	250 kbps	2.405–2.48	–94	23 mA	19 mA	+0
MRF24J40MD	250 kbps	2.405–2.475	–102	130 mA	25 mA	+20
MRF24J40MC	250 kbps	2.405–2.475	–108	120 mA	25 mA	+19

ZigBee® Development Tools

Development Kit	Part Number	Frequency	Technology	Platform
Remote Control Demo Board with ZENA™ Wireless Adapter	DM240315-2	2.4 GHz	ZigBee RF4CE	16-bit

Software

Please contact Microchip sales for ZigBee software stack and documentation.

Personal Area Networks

MiWi Wireless Networking Protocol

Some environments demand that the designer apply the lowest cost structures available via proprietary wireless networks rather than focus on interoperability with other vendor's products.

Microchip's proprietary MiWi wireless networking protocol is designed to work on a number of different radios such as Sub-GHz or 2.4 GHz IEEE 802.15.4. It delivers a stack that allows for the lowest microcontroller and memory cost yet provides point-to-point (P2P) or Mesh network functionality.

MiWi Protocol Connectivity Offers:

- Low-power radio
- Proprietary technology for greater customization
- Small footprint
- Enables mesh networking; scalable from hundreds to thousands of nodes

MiWi Wireless Networking Protocol Products

The MiWi Development Environment or MiWi DE is Microchip's proprietary wireless solution that is designed to help you to quickly and easily develop short-range wireless applications on the Sub-GHz or 2.4 GHz bands. It is optimized for low-power, low-data-rate and cost-sensitive applications. The MiWi Development Environment also offers a smaller footprint relative to the open standards-based ZigBee-compliant protocol stack.

The MiWi Development Environment includes support for Microchip's MiWi P2P, MiWi and MiWi PRO proprietary protocols. These protocols support short-range wireless network applications, from simple star networks to large mesh networks.

The Right Protocol: MiWi Protocols for Your Application

- **MiWi P2P:** Has a simple star network with a size of about 4 KB.
- **MiWi:** Supports mesh networks with up to four hops with a size of about 16 KB.
- **MiWi PRO:** Supports mesh networks and has up to 64 hops of routing capability. Also supports mesh networks up to 8000 nodes.

MiWi Protocol and Sub-GHz

Microchip's MiWi protocol supports Sub-GHz as well as 2.4 GHz. The Industrial, Scientific and Medical (ISM) unlicensed Sub-GHz radio frequency bands are used for many short-range, low-data-rate and low-power wireless applications. Microchip's MiWi protocol modules and Sub-GHz stand-alone transceivers and receiver products, including Microchip's family of wireless transmitters with embedded PIC microcontrollers, are all designed to support short-range, low-data-rate applications.

Microchip's MRF89XAM8A and MRF89XAM9A modules—designed from the MRF89XA ultra-low-power Sub-GHz transceiver IC—support the MiWi Development Environment and are footprint-compatible with the MRF24J40MA module. These small form factor, surface mount modules connect to hundreds of PIC microcontrollers via a 4-wire SPI interface and are an ideal solution for low-power wireless sensor networks, home automation, building automation and consumer applications. Like Microchip's other embedded modules, the MRF89XAM8A/M9A modules are designed for easy integration into the final product, minimizing development time and speeding time to market.

Block Diagram

MRF89XAM8A Module

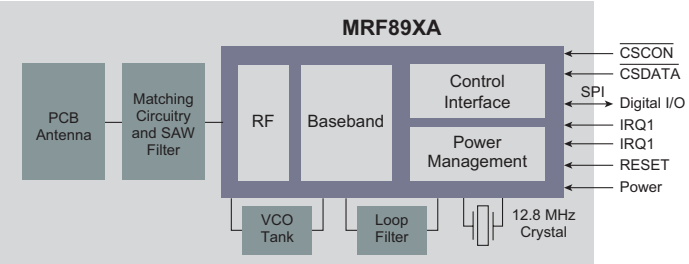

MiWi Protocol Applications

There are many home and building applications perfectly suited for the MiWi protocol. Along with 2.4 GHz, the MiWi protocol supports the Sub-GHz radio which is ideal for AMR metering, consumer electronics, home, business, industrial automation, automotive, toys and medical applications.

All of Microchip's Sub-GHz solutions complement our PIC microcontrollers, providing a flexible, cost-effective platform for creating the optimal wireless product for a given application.

Personal Area Networks

IEEE 802.15.4 Sub-GHz Products

Radios

Radios	Modulation	Data Rate (kbps)	Frequency Range (MHz)	Sensitivity (dBm)	Tx Power (dBm)
MRF89XA	FSK/OOK	200	868/915/955	–113	+12.5
MRF49XA	FSK	256	434/868/915	–110	+7

Modules

Module	Modulation	Data Rate (kbps)	Frequency Range (MHz)	Sensitivity (dBm)	Tx Power (dBm)
MRF89XAM8A	FSK/OOK	40	863–870	–113	+12.5
MRF89XAM9A	FSK/OOK	40	902–928	–113	+12.5

MCU Transmitters

MCU Transmitter	Program Memory	Program Memory	Data EEPROM/Flash	RAM (Bytes)	Frequency Range (MHz)
PIC12LF1840T48A	Flash	7.1K	256 bytes	256	418, 434, 868
PIC12LF1840T39A	Flash	7.1K	256 bytes	256	310–915
PIC12F529T48A	Flash	2.3K	64 bytes	201	418, 434, 868
PIC12F529T39A	Flash	2.3K	64 bytes	201	310–915
rfPIC12F675K	Flash	1.7K	128 bytes	64	290–350
rfPIC12F675F	Flash	1.7K	128 bytes	64	380–450
rfPIC12F675H	Flash	1.7K	128 bytes	64	850–930

MiWi™ Protocol Development Tools

Development Kit	Part Number	Frequency	Platform
MiWi™ to Wi-Fi® Demo Kit	DM182018	2.4 GHz	32-bit
MiWi Demo Kit – 2.4 GHz MRF24J40	DM182016-1	2.4 GHz	8-bit
8-bit Wireless Development Kit – 2.4 GHz MRF24J40	DM182015-1	2.4 GHz	8-bit
MRF24J40MA PICtail™ for PIC18 Explorer Board	AC164134-1	2.4 GHz	8-bit
MRF24J40MD PICtail for PIC18 Explorer Board	AC164134-3	2.4 GHz	8-bit
MRF24J40MC PICtail for PIC18 Explorer Board	AC164143	2.4 GHz	8-bit
MiWi Demo Kit – 868 MHz MRF89XA	DM182016-2	868 MHz	8-bit
8-bit Wireless Development Kit – 868 MHz MRF89XA	DM182015-2	868 MHz	8-bit
MRF89XAM8A PICtail for PIC18 Explorer Board	AC164138-1	868 MHz	8-bit
MiWi Demo Kit – 915 MHz MRF89XA	DM182016-3	915 MHz	8-bit
8-bit Wireless Development Kit – 915 MHz MRF89XA	DM182015-3	915 MHz	8-bit
MRF89XAM9A PICtail for PIC18 Explorer Board	AC164138-2	915 MHz	8-bit
MRF24J40MA PICtail for Explorer 16	AC164134-1	2.4 GHz	16- and 32-bit
MRF24J40MD PICtail for Explorer 16	AC164134-3	2.4 GHz	16- and 32-bit
MRF24J40MC PICtail for Explorer 16	AC164143	2.4 GHz	16- and 32-bit
MRF89XAM8A PICtail for Explorer 16	AC164138-1	868 MHz	16- and 32-bit
MRF89XAM9A PICtail for Explorer 16	AC164138-2	915 MHz	16- and 32-bit

Embedded Security

Security

It's important to stay one step ahead of the criminal element in today's vast interconnected world. Providing greater security within a product or system is quickly becoming a standard requirement in order to prevent theft of everything from software and hardware, to intellectual property, to data or communications services. Designers of products in markets such as automotive, medical, consumer, wireless and commercial systems have implemented a variety of approaches to providing security.

Microchip brings together both Cryptographic and Non-Cryptographic pieces to help you build a total security solution for your wireless application.

Security Products

Many wireless applications typically operate in highly constrained environments where energy resources are scarce and long battery life is highly desirable. Some of the key considerations when selecting a wireless device are power consumption, form factor and cost.

Microchip offers several different high-performance security products with low-power features. The PIC12F and PIC12LF series of products are fully integrated RF transmitters with an 8-bit microcontroller. These small form factor, low-power solutions have an operating voltage of 1.8–3.6V, six GPIO pins, a self-read/write Flash memory, and an internal 32 MHz clock, all in a sleek 14-pin TSSOP package. The RF transmitter has FSK operation up to 100 kbps and OOK operation up to 10 kbps, while the microcontroller has up to 7K of program Flash memory, up to 256 bytes of RAM memory, and up to 256 bytes of EEPROM memory, making these products an ideal fit for demanding security applications.

You can also add Microchip's proprietary, royalty-free KeeLoq technology code hopping technology, an industry-proven technology used by leading manufacturers worldwide to provide additional security to their applications. The relatively small code size is highly configurable and can easily be scaled to provide secure solutions to various markets.

Embedded Security

Block Diagram

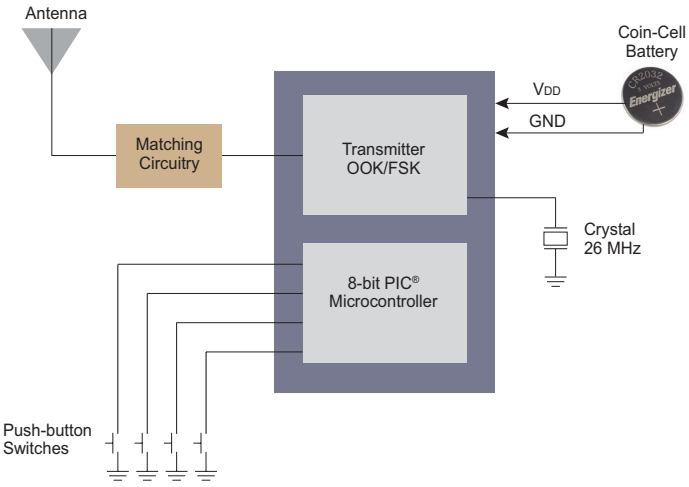

Security Applications

Microchip's security solutions have many applications including:

- Garage door openers
- Tire pressure monitoring sensors
- Automotive Remote Keyless Entry (RKE) systems
- Automotive alarm systems
- Remote key pads
- Security and safety sensors
- Wireless sensors
- Remote controls

Microchip's nanoWatt XLP microcontroller + RF Transmitter is well suited for security applications and was designed by Microchip with many of these requirements in mind.

This device combines a low-power Flash microcontroller with a wireless-enabling RF transmitter into a single 14-pin package. This streamlined packaging helps you solve both your power consumption and product footprint problems within one feature-rich device.

These products are ideal for developing low-cost and extremely low-power wireless applications such as remote keyless entry (automotive, garage doors), security systems (alarm keypads, access control, wireless security sensors) and remote monitoring.

Security Products

Device	Program Memory	Frequency
PIC12F529T48A	2.3K	418–868 MHz
PIC12LF1840T48A	7.1K	418–868 MHz
PIC12F529T39A	2.3K	310–928 MHz
PIC12LF1840T39A	7.1K	310–928 MHz

Security Development Tools

Development Tool	Part Number	Description
PIC32MZ EC Starter Kit with Crypto Engine	DM320006-C	The PIC32MZ EC Starter Kit with Crypto Engine provides the easiest and lowest-cost method to experience the high performance and advanced peripherals integrated in the PIC32MZ Embedded Connectivity MCUs.
BodyCom™ System Development Kit	DM160213	The BodyCom Development kit is designed to help you get up to speed quickly using this new technology.
Wireless Remote Control Development Kit for Ultimate KeeLoq®	DM182017-4	Demonstration and development platform that supports both Ultimate and Classic KeeLoq protocols
8-bit Wireless Development Kit – 2.4 GHz IEEE 802.15.4	DM182015-1	8-Bit Wireless Development Kit - 2.4GHz MRF24J40 provides a cost-effective method of evaluating and developing low power wireless applications based on Microchip's wireless protocols.
Wireless Remote Control Development Kit – 915 MHz	DM182017-3	The Wireless Security Remote Control Development Kit is a demonstration and development platform for wireless security remote control applications.
PICtail™ Daughter Cards	Various	Expand development with PICtail application daughter cards
Smart Card/SIM Card (SC) PICtail Daughter Board	AC164141	The Smart Card/SIM Card (SC) PICtail Daughter Board is an expansion board used for evaluating, reading and writing data on Smart Cards and SIM Cards.

www.microchip.com/security

Support

Microchip is committed to supporting its customers in developing products faster and more efficiently. We maintain a worldwide network of field applications engineers and technical support ready to provide product and system assistance. In addition, the following service areas are available at **www.microchip.com:**

- **Support** link provides a way to get questions answered fast: **http://support.microchip.com**
- **Sample** link offers evaluation samples of any Microchip device: **http://sample.microchip.com**
- **Forum** link provides access to knowledge base and peer help: **http://forum.microchip.com**
- **Buy** link provides locations of Microchip Sales Channel Partners: **www.microchip.com/sales**

Training

If additional training interests you, then Microchip can help. We continue to expand our technical training options, offering a growing list of courses and in-depth curriculum locally, as well as significant online resources – whenever you want to use them.

- Technical Training and other Resrouces: **www.microchip.com/training**
- MASTERs Conferences: **www.microchip.com/masters**
- Worldwide Seminars: **www.microchip.com/seminars**
- eLearning: **www.microchip.com/webseminars**

Sales Office Listing

AMERICAS

Atlanta
Tel: 678-957-9614
Austin
Tel: 512-257-3370
Boston
Tel: 774-760-0087
Chandler
Tel: 480-792-7200
Chicago
Tel: 630-285-0071
Cleveland
Tel: 216-447-0464
Dallas
Tel: 972-818-7423
Detroit
Tel: 248-538-2250
Houston
Tel: 281-894-5983
Indianapolis
Tel: 317-773-8323
Los Angeles
Tel: 949-462-9523
New York
Tel: 631-435-6000
San Jose
Tel: 408-735-9110
Toronto
Tel: 905-673-0699

EUROPE

Austria - Wels
Tel: 43-7242-2244-39
Denmark - Copenhagen
Tel: 45-4450-2828
France - Paris
Tel: 33-1-69-53-63-20
Germany - Dusseldorf
Tel: 49-2129-3766400
Germany - Munich
Tel: 49-89-627-144-0
Germany - Pforzheim
Tel: 49-7231-424750
Italy - Milan
Tel: 39-0331-742611
Italy - Venice
Tel: 39-049-7625286
Netherlands - Drunen
Tel: 31-416-690399
Poland - Warsaw
Tel: 48-22-3325737
Spain - Madrid
Tel: 34-91-708-08-90
Sweden - Stockholm
Tel: 46-8-5090-4654
UK - Wokingham
Tel: 44-118-921-5800

ASIA/PACIFIC

Australia - Sydney
Tel: 61-2-9868-6733
China - Beijing
Tel: 86-10-8569-7000
China - Chengdu
Tel: 86-28-8665-5511
China - Chongqing
Tel: 86-23-8980-9588
China - Hangzhou
Tel: 86-571-87928115
China - Hong Kong SAR
Tel: 852-2943-5100
China - Nanjing
Tel: 86-25-8473-2460
China - Qingdao
Tel: 86-532-8502-7355
China - Shanghai
Tel: 86-21-5407-5533
China - Shenyang
Tel: 86-24-2334-2829
China - Shenzhen
Tel: 86-755-8864-2200
China - Wuhan
Tel: 86-27-5980-5300
China - Xiamen
Tel: 86-592-2388138
China - Xian
Tel: 86-29-8833-7252
China - Zhuhai
Tel: 86-756-3210040

ASIA/PACIFIC

India - Bangalore
Tel: 91-80-3090-4444
India - New Delhi
Tel: 91-11-4160-8631
India - Pune
Tel: 91-20-3019-1500
Japan - Osaka
Tel: 81-6-6152-7160
Japan - Tokyo
Tel: 81-3-6880-3770
Korea - Daegu
Tel: 82-53-744-4301
Korea - Seoul
Tel: 82-2-554-7200
Malaysia - Kuala Lumpur
Tel: 60-3-6201-9857
Malaysia - Penang
Tel: 60-4-227-8870
Philippines - Manila
Tel: 63-2-634-9065
Singapore
Tel: 65-6334-8870
Taiwan - Hsin Chu
Tel: 886-3-5778-366
Taiwan - Kaohsiung
Tel: 886-7-213-7830
Taiwan - Taipei
Tel: 886-2-2508-8600
Thailand - Bangkok
Tel: 66-2-694-1351

03/12/14

Microcontrollers • Digital Signal Controllers • Analog • Memory • Wireless

Information subject to change. The Microchip name and logo, the Microchip logo, KeeLoq and PIC are registered trademarks and MiWi, PICkit, PICtail and ZENA are trademarks of Microchip Technology Incorporated in the U.S.A. and other countries. All other trademarks mentioned herein are property of their respective companies. © 2014, Microchip Technology Incorporated. All Rights Reserved. Printed in the U.S.A. 6/14

DS70005187A

MICROCHIP

www.microchip.com

Microchip Technology Inc.
2355 W. Chandler Blvd.
Chandler, AZ 85224-6199